SOLATUBE M74 DS-O-C-DPP
(29 IN / 740 MM)
CURB CAP

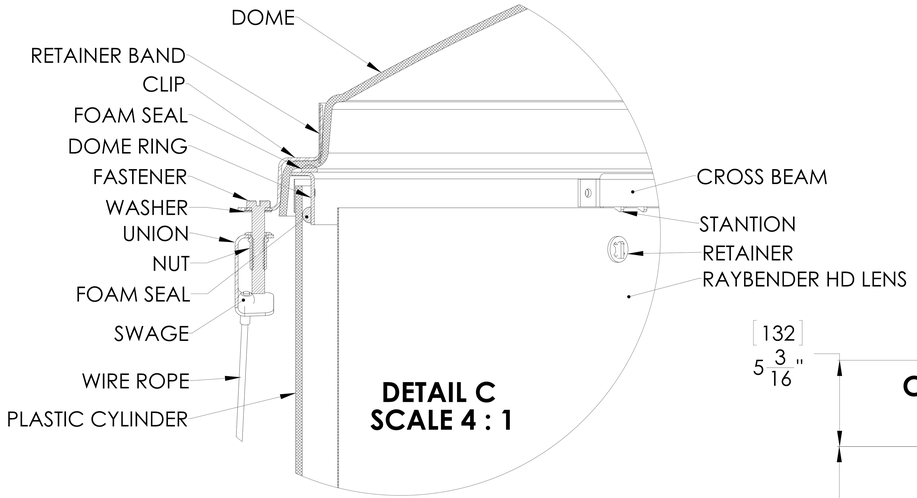

DETAIL C
SCALE 4 : 1

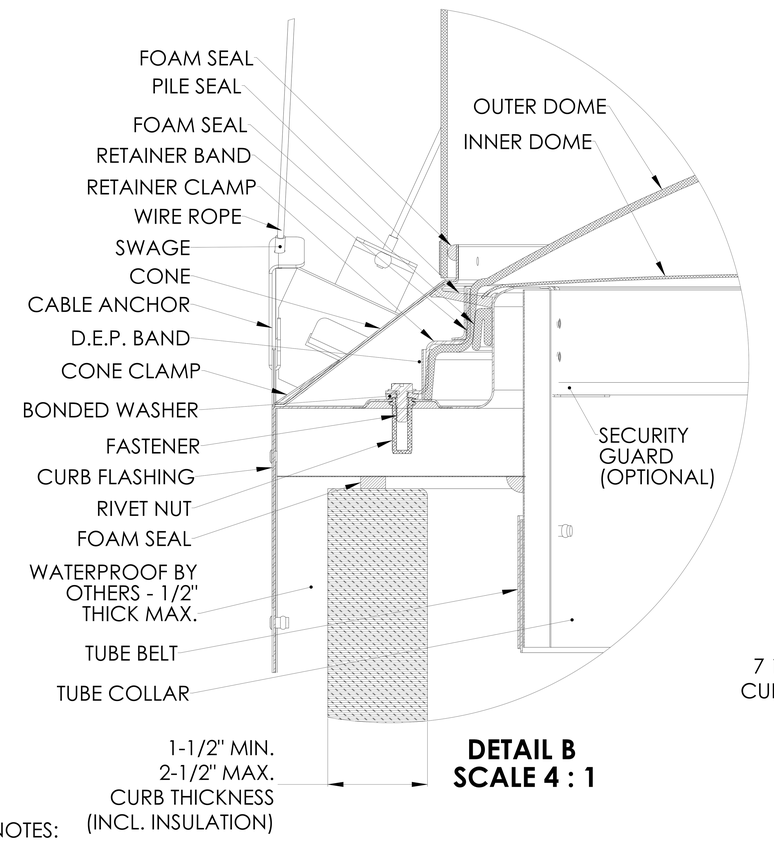

DETAIL B
SCALE 4 : 1

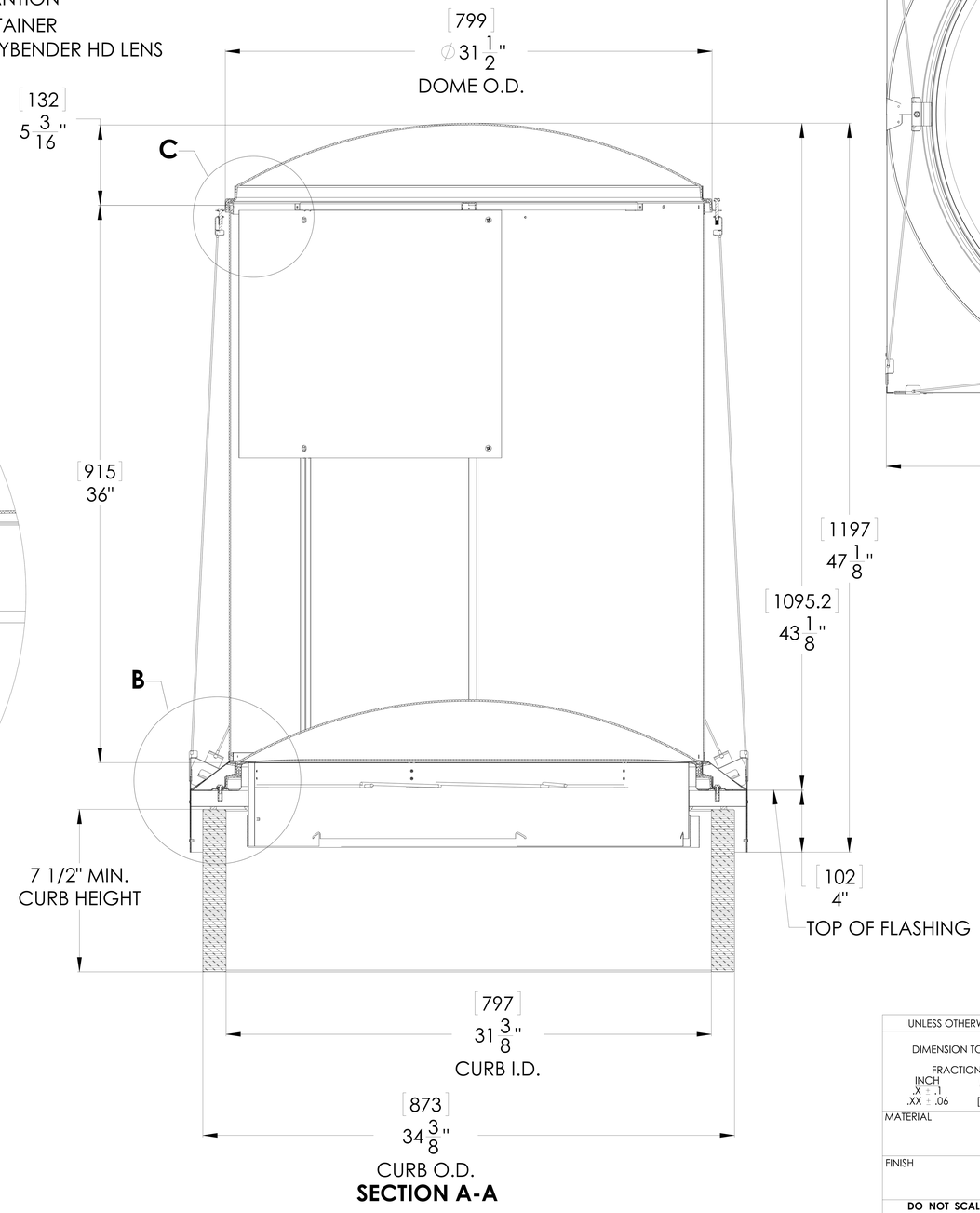

SECTION A-A

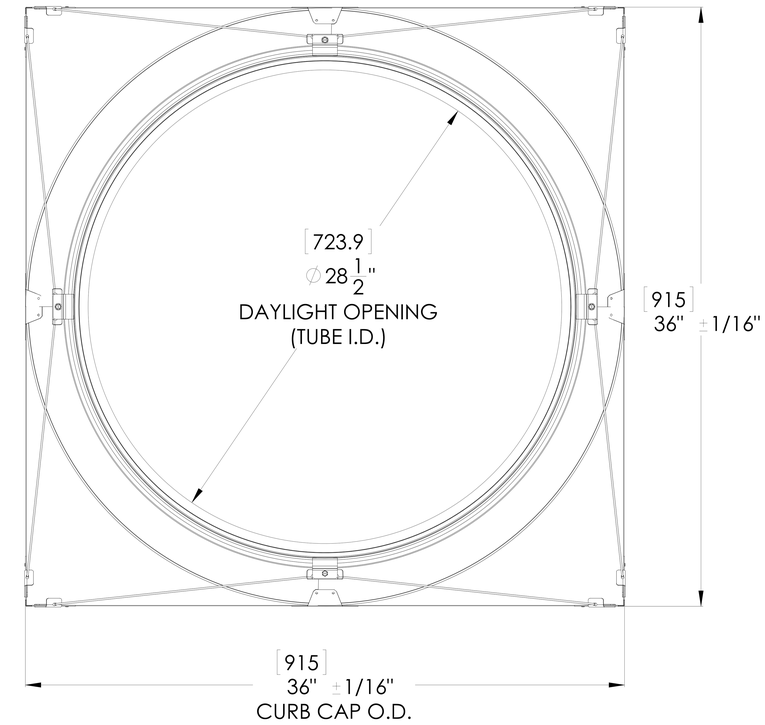

TOP VIEW

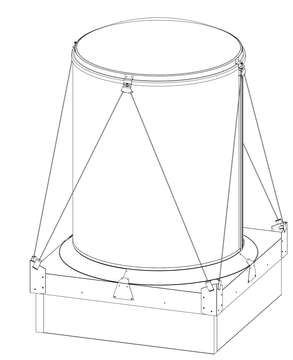

NOTES:

1. STRUCTURAL ELEMENTS (PLYWOOD, RAFTERS, DRYWALL ETC.) BY OTHERS & SHOWN FOR REFERENCE ONLY.
2. DIMENSIONS IN BRACKETS ARE METRIC UNLESS OTHERWISE SPECIFIED.
3. 6" MIN CLEARANCE SHOULD BE MAINTAINED FROM ALL SOLATUBE COMPONENTS AND OTHER PLENUM COMPONENTS.

UNLESS OTHERWISE SPECIFIED: DIMENSION TOLERANCE FRACTIONS ± 1/4" INCH .X ± .1 .XX ± .06 MILLIMETER [.X] ± 2.5 [.XX] ± 1.5	SOLATUBE INTERNATIONAL, INC. COPYRIGHT 2014 WWW.SOLATUBE.COM	SOLATUBE 2210 OAK RIDGE WAY VISTA, CALIFORNIA 92081-8341 PH (760) 597-4400
MATERIAL	DRAWN BY STEVENS / DATE 17 FEB 14	TITLE: M74 DS COLLECTOR RAYBENDER HD W/CURB FLASH
FINISH	CHECKED BY / DATE	SIZE D / DWG. NO. SM74 DS-O-C-DPP / REV 2
DO NOT SCALE DRAWING	APPROVED BY / DATE	SCALE: 1:1 / SHEET 1 OF 1